S1 CONNECTOR

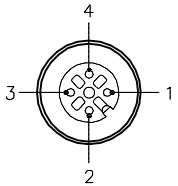

1 = + VOLTAGE
2 = N/C
3 = − VOLTAGE
4 = N/C

TERMINAL BLOCK PLUGS

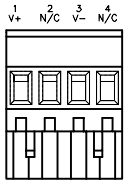

1 = + VOLTAGE
2 = N/C
3 = − VOLTAGE
4 = N/C

SPECIFICATIONS

HOUSING MATERIAL	NYLON 66 – 33% GLASS FILLED/BLACK
RECEPTACLE HOUSING MATERIAL/FINISH	STAINLESS STEEL/PASSIVATED
CONTACT CARRIERS/COLOR	TPU/BLACK
CONTACT MATERIAL/PLATING	BRASS/GOLD
OPERATING VOLTAGE	18–31 V
OPERATING CURRENT	< 11 mA
OUTPUT CURRENT LIMIT	280 mA
PROTECTION CLASS to DIN 40050	IP 67 – ONLY WHEN ALL RECEPTACLES ARE COVERED WITH PLUGS OR CONNECTED
OPERATING TEMPERATURE	−30°C to +80°C (−22°F to +176°F)
LED, INDICATION: GREEN	BUS POWER
LED, INDICATION: RED	SHORT–CIRCUIT INDICATION

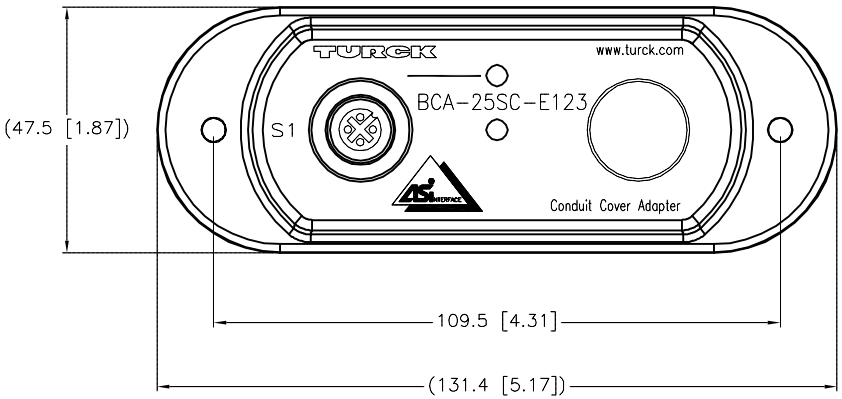

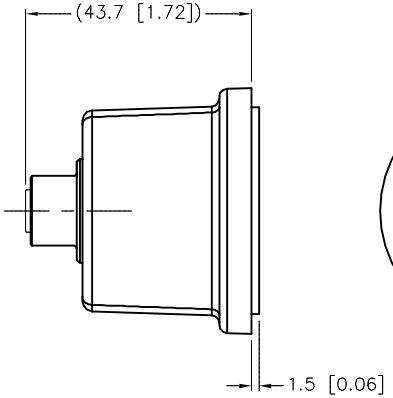

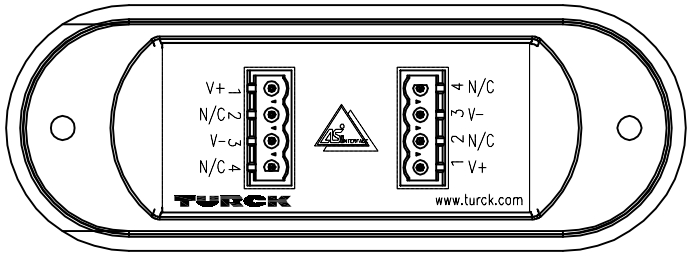

NOTE:

1. THIS DEVICE IS EQUIVALENT TO ONE (1) SLAVE ON THE NETWORK.

SOURCE DRAWING - FOR REFERENCE ONLY

COVER SCREWS INCLUDED

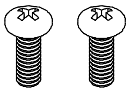

FORM 8 CONDUIT BODIES: 10–24 SCREWS

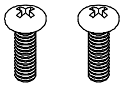

MARK 9 CONDUIT BODIES: 8–32 SCREWS

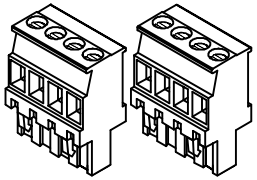

TERMINAL PLUGS INCLUDED

REV	DESCRIPTION	BY	DATE	ECO NO.
D	ADD THICKER GASKET	RDS	09/12/13	42993

RELATED DOCUMENTS
1.
2.
3.
4.

3RD ANGLE PROJECTION

THIS DRAWING IS CONFIDENTIAL AND THE PROPERTY OF TURCK INC. USE OF THIS DOCUMENT WITHOUT WRITTEN PERMISSION IS PROHIBITED.

TURCK INC
High Technology Sensors and Automation Controls
3000 CAMPUS DRIVE
MINNEAPOLIS, MN 55441
1–800–544–7769
(763) 553–7300
(763) 553–0708 fax
turck.com

MATERIAL

FINISH

ALL DIMENSIONS DISPLAYED ON THIS DRAWING ARE FOR REFERENCE ONLY

CONTACT TURCK FOR MORE INFORMATION

DRFT DF | DATE 07/25/05
APVD DF | SCALE 1=1.5

UNIT OF MEASUREMENT
MILLIMETER [INCH]
DO NOT SCALE THIS DRAWING

DESCRIPTION: BCA–25SC–E123

IDENTIFICATION NO.: U3–00280 | REV: D

FILE: U3–00280 | SHEET 1 OF 1

Approved 09/20/2013, work order #46099 by J.S.